J. exp. Biol. **172**, 1-17 (1992)
Printed in Great Britain © The Company of Biologists Limited 1992

PHYSIOLOGY OF V-ATPases

BY WILLIAM R. HARVEY
Department of Biology, Temple University, Philadelphia PA 19122, USA

V-ATPases are membrane energizers

Protons migrate much faster than other ions through water, ice and water-lined membrane channels because they participate in hydrogen bonding and H^+/H_2O exchange. Similarly, hydrogen bonding enables protons with amino, carbonyl, phosphoryl and sulfonyl residues to influence critically the charge, conformation and stability of proteins. Therefore, it is not surprising that regulation of proton concentration, or pH, is an essential requirement in biological systems. It is no surprise either that enzymes which regulate proton concentration (i.e. proton pumps) should have evolved or that evolution should have used these enzymes further, for energization of biological membranes. At present there appear to be three classes of ATP-hydrolyzing proton pumps, or H^+-ATPases, which were dubbed P-ATPases, F-ATPases and V-ATPases, by Pederson and Carafoli (1987). H^+-translocating P-ATPases, as well as the Na^+/K^+-ATPase of plasma membranes and the Ca^{2+}-ATPase of sarcoplasmic reticulum, form phosphoaspartyl intermediates and are inhibited by the phosphate analogue orthovanadate. F-ATPases are the proton-translocating ATP synthases of mitochondria, chloroplasts and bacterial plasma membranes and are inhibited by azide.

V-ATPases (V-type ATPases or vacuolar H^+-ATPases) are the proton-translocating ATPases best known as acidifiers of cytoplasmic vesicles and vacuoles. During reaction, they separate protons from gegenions, thus producing an electrical potential difference, $\Delta\Psi$, across the membrane in which they reside. $\Delta\Psi$ in turn can drive other ion movements, leading directly to acidification or alkalization and secondarily to salt transport and water movement. V-ATPases are inhibited by bafilomycin (in nanomolar concentrations) and *N*-ethylmaleimide (in micromolar concentrations).

In this paper the transport work that is accomplished when specific channels and porters are present in V-ATPase-energized membranes will be discussed using an intuitive thermodynamic analysis. Martin (1992) discusses similar cases using ionic circuit analysis. The two approaches provide complementary frameworks for understanding how the (output) compartment receiving protons from a V-ATPase can be rendered acidic, neutral or even alkaline, depending upon the selectivity of other carriers (porters) and channels present, upon the strength of the gegenions and upon the cellular and compartmental geometry. Encouragingly, both types of analysis lead to similar conclusions.

Biochemical studies on V-ATPases were initiated on vacuolar membranes of fungi and plants and on clathrin-coated vesicles and other components of endomembrane systems (reviewed by Sze, 1985; Mellman *et al.* 1986; Nelson, 1988, 1989; Forgac, 1989; Stone *et*

Key words: vacuolar-type ATPases, H^+-ATPases, lepidopteran midgut, acidification, alkalization.

al. 1989). However, V-ATPases were soon found to recycle between vesicles and the plasma membrane in renal epithelia (Gluck *et al.* 1992; Gluck, 1992). Increasingly they are being found as permanent residents of plasma membranes e.g. phagocytic cells (Grinstein *et al.* 1992), insect gastrointestinal and sensory epithelia (Wieczorek, 1992; Klein, 1992) and frog skin (Harvey, 1992). Unlike the Na^+/K^+-ATPase, which usually energizes *basolateral* membranes of ion-transporting epithelial cells, V-ATPases usually energize *apical* plasma membranes in renal and epidermal epithelia of vertebrates and in gastrointestinal and sensory epithelia of insects.

V-ATPases are widely distributed and have diverse physiological roles

V-ATPases are ancient and ubiquitous, being closely related to the ATP synthases of archaebacteria (Ihara *et al.* 1992). They play a key role in the acidification of endomembrane-bordered compartments of all eukaryotic cells. In mammalian cells V-ATPases help make Golgi vesicles mildly acidic, clathrin-coated vesicles more acidic and lysosomes highly acidic (Nelson, 1992*a*,*b*; Forgac, 1992). They are involved in endocytosis and exocytosis, acidification being important in the addition of carbohydrate moieties, which act as recognition sites during cell sorting (Mellman, 1992; Klionsky *et al.* 1992). In yeasts and in other fungi such as *Neurospora*, V-ATPases acidify vacuoles used as storage sites for amino acids, Ca^{2+}, carbohydrates, phosphate and hydrolases (Bowman *et al.* 1992; Stevens, 1992). In tonoplasts, the membranes surrounding the central vacuole of plant cells, they energize salt regulation and osmotic balance (Sze *et al.* 1992; Bertl and Slayman, 1992). V-ATPases energize accumulation of neurotransmitter amines by synaptic vesicles and chromaffin granules (Moriyama *et al.* 1992). In osteoclast membranes they acidify the extracellular fluid and lead to bone reabsorption, both normal and abnormal (as in osteoporosis; Chatterjee *et al.* 1992). In renal plasma membranes V-ATPases energize the acidification of urine and the reabsorption of bicarbonate by the blood that are essential for acid–base balance (Gluck, 1992; Gluck and Nelson, 1992; Brown *et al.* 1992).

Since protons are pumped into an acidic compartment in all of the above cases it would be tempting to conclude that proton transport leads only to acidification. However, a V-ATPase in the apical plasma membrane of phagocytic cells alkalizes the external medium (Grinstein *et al.* 1992); similarly, a V-ATPase in the apical plasma membrane of certain insect epithelial cells (Wieczorek *et al.* 1991) can produce a lumen pH exceeding 11 (Dow, 1984). The precise way in which a V-ATPase in the goblet cell apical membrane, GCAM, of lepidopteran midgut epithelial cells can alkalize the lumen is discussed by Wieczorek (1992), Klein (1992), Dow (1992), Wolfersberger (1992), Moffett and Koch (1992), Martin (1992) and Zeiske (1992).

However, a brief preview of the insect plasma membrane V-ATPase story may be helpful here. In goblet cell apical membranes of living lepidopteran midgut a very active V-ATPase leads to alkalization of the lumen, not acidification. This result comes about, first, because the transporting membrane is nearly impermeable to anions, which therefore *cannot* be driven by the membrane potential difference, $\Delta\Psi$ (>180 mV), through the membrane in pursuit of protons, to maintain electroneutrality and, second,

because a K^+/nH^+ antiporter in the same membrane rapidly exchanges protons for potassium ions. The large apical $\Delta\Psi$ from proton pumping is also used to energize amino acid absorption and to regulate the concentrations of other ions (Dow, 1986). In Malpighian tubules and salivary glands massive K^+ secretion is coupled to water flow, forming 'primary urine' and saliva, respectively (Maddrell and O'Donnell, 1992). In insect sensory sensilla electrogenic proton transport modulates the receptor potential and leads to a potassium-rich receptor lymph cavity (Thurm and Küppers, 1980; Klein, 1992).

V-ATPase-energized membranes are studded with portasomes

V-ATPases are multimeric complexes with cytoplasmic V_1 and membrane-bound V_0 domains analogous to the F_1 and F_0 domains of F-ATPases (Nelson, 1992*a*; Gluck *et al.* 1992). Cytoplasmic ATP is hydrolyzed in the V_1 domain, forcing protons away from the cytoplasm through the V_0 domain and across the membrane. The large, hydrophilic V_1 domains protrude as particles on the cytoplasmic face of vacuolar and plasma membranes in both acidifying and alkalizing systems (Table 1). Their structure in fungal vacuoles is discussed by Bowman *et al.* (1992), in kidney plasma membranes and vesicles by Brown *et al.* (1992) and in insect plasma membranes by Klein (1992).

F_1-like particles in insect tissues were first reported on the cytoplasmic surface of apical plasma membranes in K^+-transporting rectal epithelia (Gupta and Berridge, 1966) and in lepidopteran midgut (Anderson and Harvey, 1966). Subsequently, they have been reported on the apical plasma membranes of K^+-secreting trichogen and tormogen cells of insect sensory sensilla (see references in Thurm and Küppers, 1980) and on many other K^+-transporting plasma membranes of insect epithelia, including Malpighian tubules (see references in Harvey, 1980). Like F_1 particles, V_1 particles are approximately 9–10 nm in diameter and are always present on cytoplasmic surfaces of cation-transporting membranes. Unlike ATP-synthesizing F_1 particles, V_1 particles always couple ATP hydrolysis to the creation of cation electrochemical gradients. The term 'portasome' was

Table 1. *Distribution of V_1 portasomes*

	Organism	Reference
A Vacuolar and vesicular membranes		
Fungal vacuoles	*Neurospora crassa*	Bowman *et al.* (1989)
Plant vacuoles	*Mesembryanthemum crystallinum*	Klink and Lüttge (1991)
	Glycine max (soybean)	Morre *et al.* (1991)
	Daucus carota	Taiz and Taiz (1991)
Chromaffin granules	*Bos taurus*	Schmidt *et al.* (1982)
Synaptic vesicles	*Cavis spp* (Guinea pig)	Stadler and Tsukita (1984)
B Plasma membranes		
Bladder epithelia	*Bufo marinus*	Brown *et al.* (1987)
Insect epithelia	*Calliphora erythrocephala*	Gupta and Berridge (1966)
	Hyalophora cecropia	Anderson and Harvey (1966)
	Manduca sexta	Cioffi (1979)
	Other insects	References in Harvey (1980)

suggested to denote the transport particles visible in electron micrographs of insect cation-transporting membranes (Harvey *et al.* 1981).

V-ATPases generate membrane potentials

V-ATPases pump protons without internal counterions and therefore are inherently electrogenic. Since they use ATP, they are also strongly oxygen-dependent in cells with low anaerobic phosphorylating capacity or low phosphagen stores. They energize membranes by transducing the energy from ATP hydrolysis into a proton current, which establishes an electrochemical gradient $\Delta\mu_H$. To emphasize the special nature of this electromotive force for protons distributed across biomembranes, Mitchell (1961) coined the term proton-motive force, or pmf. Just as a conventional electromotive force (emf) can drive a multiplicity of processes depending upon other components in an electric circuit, so a pmf can drive many processes depending upon other carriers and channels in biomembranes. Alone in a lipid bilayer, active V-ATPase would form a large voltage with very small changes in H^+ concentration. In the presence of anion channels, however, the enzyme would drive a continuing acid flux; and in the presence of a C^+/nH^+ antiporter or symporter and appropriate gegenions (anions), the enzyme can drive a continuing alkalizing flux. Finally, the enzyme can generate or modulate a receptor $\Delta\Psi$ and therefore influence neural signaling.

In discussing these diverse functions systematically, we will assume (1) that an electrogenic V-ATPase moves protons from the cytoplasm to the opposite side of the membrane, rendering the output side positive with respect to the cytoplasmic side; (2) that electroneutrality is preserved in bulk solutions; (3) that, in the absence of other pumps, channels, symporters or antiporters, the membrane is impermeable to all ions; (4) that a C^+/nH^+ antiporter can be driven by either the electrical ($\Delta\Psi$) or the chemical ($\boldsymbol{RT}\Delta pH$) component of the pmf; and (5) that the H^+/ATP and C^+/H^+ stoichiometries can be considered conveniently to be 3/1 and 2/3, respectively. [The actual value of n for H^+/ATP is thought to be 3 by analogy with F-ATPases. For lepidopteran midgut the K^+/H^+ ratio is known only to be less than 1; if it were 2/3 then the K^+/ATP ratio would be 2, which is the minimal value estimated from oxygen measurements (Harvey *et al.* 1967).]

Case 1. V-ATPase only – membrane energization

Fig. 1A describes the primary membrane-energizing step. A V-ATPase is inserted into a membrane which is otherwise impermeable to all ions, including protons. The enzyme reaction merely separates H^+ from A^- across the membrane and generates a positive membrane potential ($\Delta\Psi$) which provides capacitative energy for electrochemical work. The $\Delta\Psi$ which develops instantaneously across the membrane capacitance equals the total pmf transduced by the V-ATPase. The ΔG for ATP hydrolysis is given by

Fig. 1. Generation of $\Delta\mu_H$ by V-ATPases: (A) V-ATPase alone, ΔG_{ATP} transduced to $\Delta\mu_H$; (B) nonelectrolyte solution, transported H^+ charges membrane capacitance; (C) electrolyte solution, K^+ 'replaces' H^+, leading to 'static' pH drop. M, membrane.

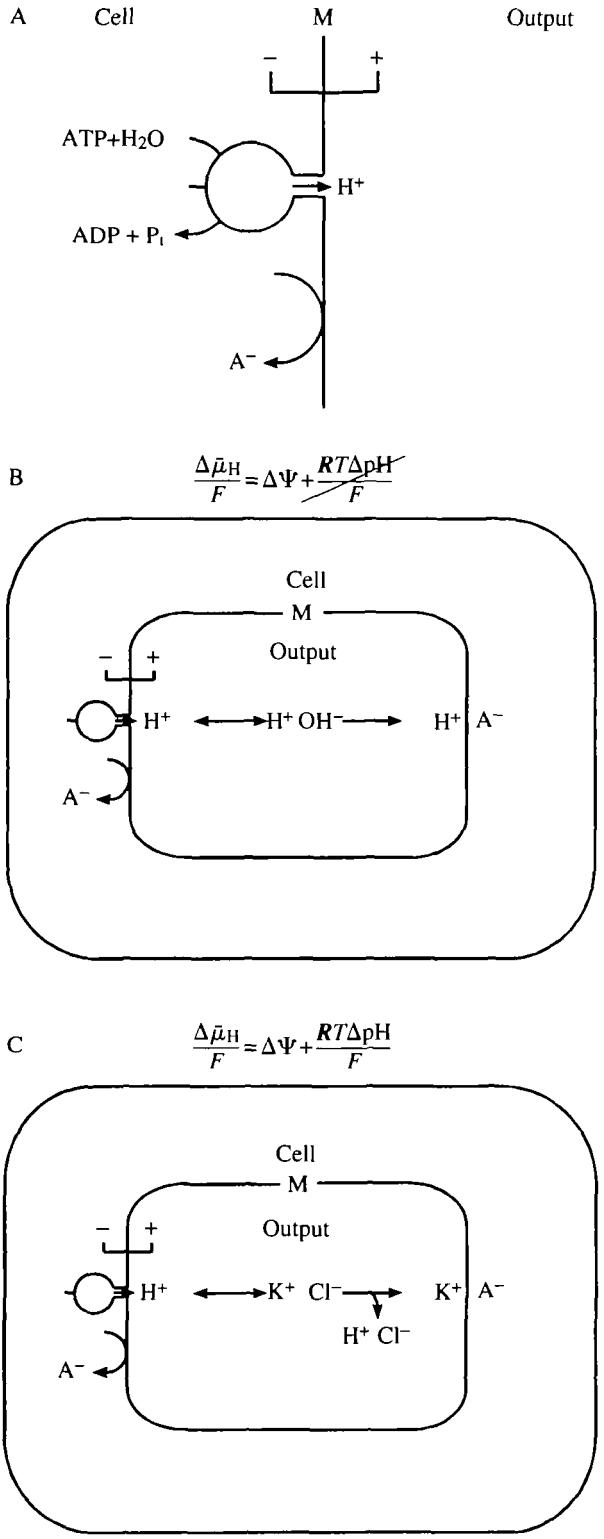
A
Cell
M
Output
−
+
ATP+H2O
H+
ADP + Pi
A−
B
Δμ̄H/F = ΔΨ + RTΔpH/F
Cell
M
Output
−
+
H+
H+ OH−
H+
A−
A−
C
Δμ̄H/F = ΔΨ + RTΔpH/F
Cell
M
Output
−
+
H+
K+ Cl−
K+
A−
H+ Cl−
A−

Fig. 1

$RT\ln K_e/Q$ (where K_e is the equilibrium constant and Q is the products to reactants concentration ratio for ATP hydrolysis under actual conditions). This value is the total free energy available and sets an upper limit upon the pmf. The maximal pmf (in volts) can be estimated by dividing ΔG (in kJ mol^{-1}) by nzF (where n is the stoichiometric ratio of H^+/ATP, z is the valence with sign and F is Faraday's number). For example ΔG for ATP hydrolysis is estimated to be –44.1 kJ mol^{-1} in lepidopteran midgut cells (Mandel *et al.* 1980); if n and z are both 1, then the pmf would be 440 mV (Harvey *et al.* 1981). The protons charging the membrane capacitance can be expected to exchange instanteously with ions in the bulk solution; if a vesicle were filled with an aqueous nonelectrolyte (Fig. 1B), the H^+/H^+ exchange should have no effect on the pH of the bulk solution. The entire pmf should still appear as $\Delta\Psi$.

V-ATPase and acidification

However, real vacuoles and synaptic vesicles are likely to contain strong electrolytes, such as KCl. Instantaneous exchange of transported H^+ for K^+ could lead to an increase in the concentration of HCl in the vacuolar space (Fig. 1C). The maximum decrease in bulk-phase pH would depend upon the surface/volume ratio of the vesicle and the enclosed solute composition (Table 2) and would be diminished considerably by the buffering capacity of the surface membrane proteins.

Case 2. V-ATPase with anion channel – acidification with anion flow

In typical acidifying vacuolar membranes an anion conductance, normally associated with a chloride channel, is present in the membrane along with the V-ATPase (Fig. 2). Pumped protons are accompanied by anionic gegenions which cross the membrane *via* the channel, leading to a net proton–anion flux. The flux of a strong anion, such as chloride, would lead to net HCl secretion. Much of the pmf would appear as a ΔpH with $\Delta\Psi$ approaching zero and the output compartment becoming very acidic.

Table 2. *Maximal pH decreases from charging membrane capacitance*

Output compartment	Area (cm^2)	Charge (mol)	Volume (l)	ΔH^+ (mol l^{-1})	ΔpH
Vesicle, sphere (D, 1 μm)	$10^{-7.5}$	$10^{-19.5}$	$10^{-14.3}$	$10^{-4.2}$	2.8
Vacuole, sphere (D, 10 μm)	$10^{-5.5}$	$10^{-17.5}$	$10^{-12.2}$	$10^{-5.2}$	1.8
Cell, cylinder (L, 100 μm; D, 10 μm)	$10^{-4.5}$	$10^{-16.5}$	$10^{-11.1}$	$10^{-5.4}$	1.6
Organ lumen, cylinder (L, 10^4 μm; D, 10^4 μm)	3.1	$10^{-11.5}$	$10^{-3.3}$	$10^{-8.2}$	0.2

Assume: charge ($Q = C_m V$) = 1 pmol cm^{-2}; C_m = 1 μF cm^{-2}; V = 100 mV; pH initial = 7; all H^+ exchanges with K^+; activity coefficient of H^+ = 1.
D, diameter; L, length.

Case 3. V-ATPase with cation channel – acidification with cation exchange

The pmf can also acidify the output compartment by exchanging a weak cation, the proton, for a strong cation, such as Na^+ (Fig. 3). This combination amounts to a secondary Na^+ pump and is thought to account for Na^+ uptake from (low Na^+) pond water by the frog skin (Harvey, 1992). The V-ATPase catalyzes separation of protons from anions across an anion-impermeable membrane. The resulting $\Delta\Psi$ drives Na^+ through a Na^+ channel into the cell. Since the strong cation, Na^+, is replaced by the weak cation, H^+, the pond becomes 'acidic'. Acidification of the kidney tubule lumen is thought to be accomplished by such a channel-mediated Na^+/H^+ interchange driven by the V-ATPase of the apical membrane (Gluck, 1992). In both frog skin and renal epithelia the V-ATPase and Na^+ channel are located in separate cells.

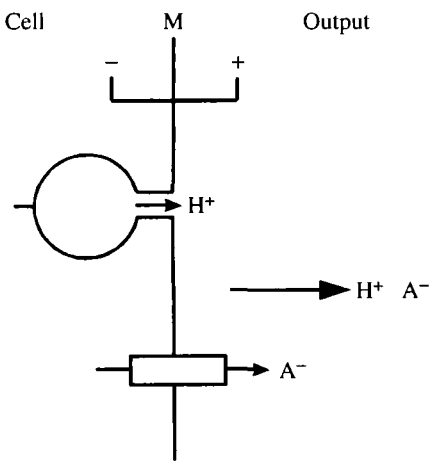

$$\frac{\Delta\bar{\mu}_H}{F} = \Delta\Psi + \frac{RT\Delta pH}{F}$$

$\Delta\Psi$ can ⟶ 0

∴ Output compartment can be very acidic

Fig. 2. V-ATPase in membrane with anion channel leads to acidification (classical acidic vacuole).

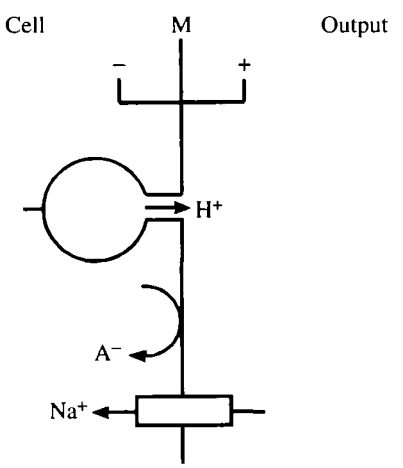

$$\frac{\Delta\bar{\mu}_H}{F} = \Delta\Psi + \frac{RT\Delta pH}{F}$$

$\Delta\Psi$ drives $\Phi_{oi}^{Na^+}$,
Na_o^+ replaced by H_o^+, becomes acidic

Fig. 3. V-ATPase in membrane with cation channel leads to acidification and cation absorption (apical membrane of frog skin cell or kidney tubule cell).

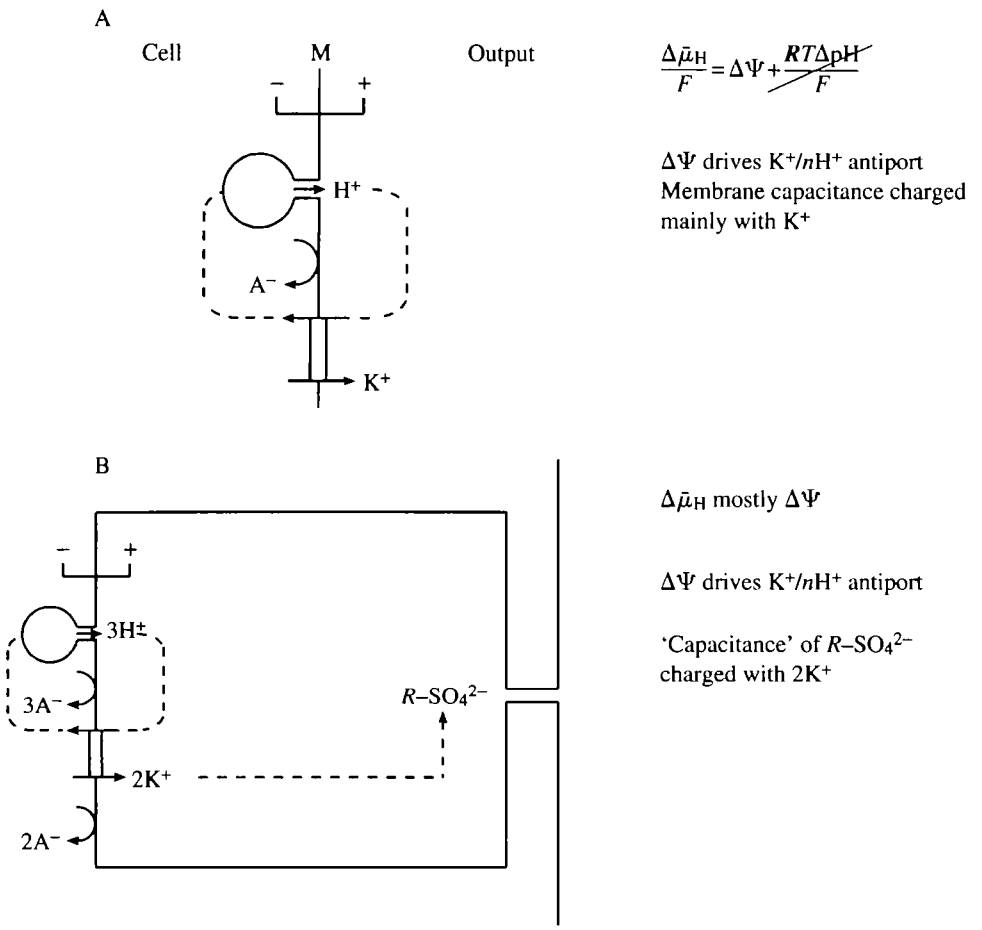

Fig. 4. V-ATPase in membrane with C^+/nH^+ antiporter: (A) membrane capacitance is charged with K^+ (midgut goblet cell apical membrane); (B) in the presence of a sulfated protein matrix both the membrane capacitance and the sulfated protein 'capacitance' are charged (theoretical case – isolated midgut goblet cavity).

V-ATPase and alkalization

Case 4a. V-ATPase and C^+/nH^+ antiporter – secondary K^+ transport

In this theoretical case (Fig. 4A) the pmf drives electrophoretic C^+/nH^+ antiport. A V-ATPase is present in an ion-impermeable membrane containing a K^+/nH^+ antiporter that is responsive to the membrane potential. The $\Delta\Psi$ drives protons (weak cations) back to the input side in exchange for strong cations, such as K^+. K^+ rather than H^+ is separated from A^- across the membrane, yielding a $\Delta\Psi$ nearly equivalent to the $\Delta G/n$ for K^+/ATP (expressed in volts) of the ATP hydrolysis. The effect of the proton/cation antiport is to replace the very weak cation, H^+, by a very strong cation, such as Na^+ or K^+, thereby replacing the conditions for acidification by conditions for alkalization.

Wieczorek *et al.* (1989) found that goblet cell apical membrane, GCAM, vesicles from

Manduca sexta midgut became acidic (*in vitro*) in the absence of K^+, implying a Cl^- conductance in the isolated vesicles. If the goblet cavity (output side of the GCAM *in vivo*) were to become acidic then the ΔpH could drive even an electroneutral K^+/H^+ antiport, which could recycle H^+ to the cytoplasm and secrete K^+ into the goblet cavity, thus accounting for the K^+ 'pumping'. However, Chao *et al.* (1991) ruled out an electroneutral antiport in the intact midgut on two grounds. (1) The chloride conductance of GCAM *in vivo* is very low, implying that HCl could not be secreted. (2) The measured pH of the cytoplasm is 7.0, whereas that of the goblet cavity is a mildly alkaline 7.23, again implying that net HCl is *not* being secreted into the cavity. Moreover, the $\Delta\Psi$ across the apical membrane in isolated midgut can exceed 180 mV, lumen positive (Dow and Peacock, 1989). Therefore, Chao *et al.* (1991) postulated an electrophoretic K^+/nH^+ antiport driven by the membrane potential. Wieczorek *et al.* (1991) identified and characterized the antiporter in isolated GCAM vesicles. They demonstrated that a V-ATPase in parallel with a C^+/nH^+ antiporter can render the output side of a proton-pumping membrane alkaline (Wieczorek, 1992; see also Grinstein *et al.* 1992).

The V-ATPase–K^+/nH^+ antiporter couple can also generate a higher $\Delta\Psi$ than a V-ATPase alone. If the H^+/ATP ratio for a V-ATPase is 3, then the maximal $\Delta\Psi$ would be equivalent to $\Delta G/3$. Coupled to an antiporter with a 2/3 K^+/H^+ ratio, the K^+/ATP ratio would be 2 and the maximal $\Delta\Psi$ would be equivalent to $\Delta G/2$. For example, in lepidopteran midgut ΔG is $-44.1\,kJ\,mol^{-1}$, corresponding to approximately 450 mV, which would yield a maximal $\Delta\Psi$ of 150 mV for the V-ATPase operating alone but a maximal $\Delta\Psi$ of 225 mV when coupled to the antiporter. Gluck (1992) argues that V-ATPases with H^+/ATP stoichiometric ratios of 3 may have been selected for in the evolution of endomembranes, where high voltages might exceed dielectric limits, whereas P-ATPases with H^+/ATP ratios of 1 may have been selected for in plant membranes. It appears that the midgut plasma membrane uses a V-ATPase yet generates a high voltage by adding a K^+/nH^+ antiporter to the V-ATPase-containing membrane. The V-ATPase/antiporter couple acts like a transformer, increasing the voltage across the membrane while decreasing the current (Martin, 1992).

Case 4b. V-ATPase, C^+/nH^+ antiporter, fixed anionic output matrix

In lepidopteran midgut and insect sensory sensilla a large transapical membrane potential is generated; the output compartment in each case is positive with respect to the cells and contains an extracellular sulfonated glycoprotein matrix. A role for this matrix is suggested by the finding that the pH of the goblet cavity is virtually neutral. In Fig. 4B, we assume that the V-ATPase catalyzes ATP hydrolysis, which separates $3H^+$ from $3A^-$ across GCAM, and that the $3H^+$ immediately exchange for $2K^+$ *via* the electrophoretic antiporter. The $2K^+$ are neutralized by sulfated protein in the goblet cavity matrix. The matrix can be viewed as an extension of the membrane capacitance but charged with K^+.

This case represents the apical region of an ideal isolated goblet cell in which a sulfated glycoprotein matrix receives transported potassium ions. X-ray microanalysis showed that the goblet cavity in isolated, open-circuit midgut has an elemental chlorine concentration corresponding to $19\,mmol\,l^{-1}$ but an elemental sulfur concentration

corresponding to 59 mmol l^{-1} (Dow *et al.* 1984). Assuming that the sulfur is present as sulfated proteoglycans, the strong potassium cations exchanged for the weak protons would be electrically balanced mainly by the strong sulfate anions, leaving the goblet cavity near neutrality and accounting for the pH of 7.23 recorded there by Chao *et al.* (1991). However, there would still be no explanation for the massive net K^+ flux towards the lumen and the lumen pH of more than 10.5.

Metabolic carbonate and midgut lumen alkalization

Case 5. V-ATPase, K^+/nH^+ antiporter, fixed strong anionic output matrix and weak anionic counterion – alkalization of the lumen

Fig. 5 is the current 'standard' model for midgut $\Delta\Psi$ generation, K^+ transport and lumen alkalization; it requires synergism between goblet and columnar cells. The weak carbonate anion, from the metabolism of both goblet and columnar cells, allows K^+ to move from goblet matrix to lumen where K_2CO_3 accumulates and accounts for the high lumenal alkalinity. Dow's (1984) suggestion that bicarbonate is secreted into the goblet cavity is ruled out by the pH of 7.23 recorded there; it seems likely instead that carbonate is secreted directly to the lumen.

V-ATPase activity in GCAM separates 3 protons from 3 cellular anions creating a membrane potential approaching the pmf calculated from $\Delta G/n$ of ATP hydrolysis. The

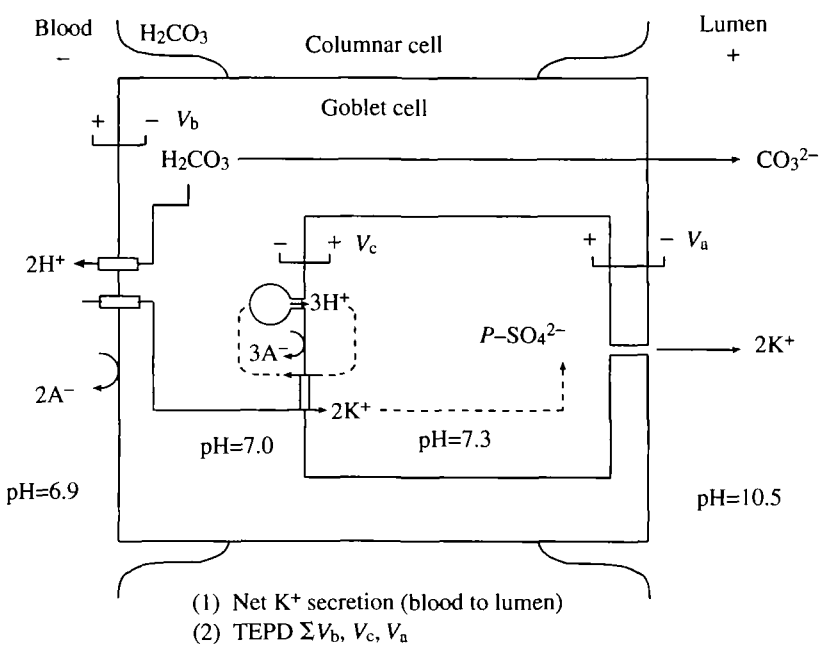

Fig. 5. V-ATPase in membrane with C^+/nH^+ antiporter, sulfated protein matrix and carbonate source ('midgut model', insect sensory sensilla).

$\Delta\Psi$ drives the 3 protons *via* the antiporter back to the cell in exchange for $2K^+$, leaving 2 anions behind in the cell, thereby maintaining a large $\Delta\Psi$. The $2K^+$ associate with a sulfate group of the matrix protein. Simultaneously, metabolic CO_2 and H_2O form H_2CO_3, which, in the presence of carbonic anhydrase localized in CCAM and the goblet cell valve (Ridgway and Moffett, 1986), dissociates to $2H^+$ and CO_3^{2-}. The CO_3^{2-} allows the $2K^+$ to leave the goblet matrix and move to the lumen. The strong cation, K^+, associated with the very weak anion, CO_3^{2-} (pK_2=10.25 at 25 °C), leads to the highly alkaline lumen. The $\Delta\Psi$ is less than the pmf but remains high (Dow and Peacock, 1989; Moffett and Koch, 1988) because of a finite resistance to CO_3^{2-} movement so that it 'lags behind' the pumped K^+ as they move by separate routes towards the lumen. The $2H^+$ from the H_2CO_3 electrically balance the $2A^-$ left behind in the basal extracellular space as $2K^+$ move into the cells replacing those antiported to the cavity. Since the cellular pH is near neutrality, a net increase must occur in hemolymph acidity.

The ratio of K^+ transported to oxygen consumed can be as high as 2.0 in *Hyalophora cecropia* midgut (Harvey *et al.* 1967) so the ratio of K^+ to carbonate could be 2/1 as suggested by this model. The mechanism of carbonate movement from cell to lumen is unknown, although carbonic anhydrase is present in the apical membranes (Ridgway and Moffett, 1986) and a bicarbonate/chloride antiporter has been postulated there (Chao *et al.* 1989). CO_2 could cross the apical membrane by simple diffusion.

V-ATPase-energized apical membrane is a target for Bt toxin

The midgut model has been helpful in explaining the mechanism of action of the caterpillar-specific delta endotoxin from *Bacillus thuringiensis* (Wolfersberger, 1992). In brief, the endotoxin binds to a receptor in columnar cell apical membrane, CCAM; a cation channel is formed, the $\Delta\Psi$ is short-circuited and the membrane is de-energized. The proton barrier is thereby lost between pH 7 cells and pH 11 lumen and the cells become alkaline. F-ATPase activity, which requires mildly acidic cytoplasmic pH, is disrupted. The midgut cells break down and the caterpillar dies. The endotoxin is environmentally safe because the gastointestinal cells of birds and mammals do not possess a V-ATPase-energized GCAM in series with a Bt-receptor-containing CCAM, together forming a K^+-impermeable apical membrane. Moreover, they do not possess the highly alkaline lumenal pH required to activate the endotoxin nor the high-affinity toxin-binding proteins.

Columnar cells absorb amino acids by electrogenic K^+/amino acid symport

Amino acid absorption in lepidopteran midgut is energized by the GCAM V-ATPase. Although the uptake is catalyzed by a K^+/amino acid symporter, there is no K^+ activity gradient between lumen and cells; instead the uptake is driven by the large $\Delta\Psi$, lumen positive, across the columnar cell apical membrane established by the electrically connected, V-ATPase-energized GCAM (Giordana *et al.* 1989).

Acid–base balance of *Manduca sexta* hemolymph

What becomes of the K_2CO_3 in the midgut lumen and why is the hemolymph not acidic? The simplest hypothesis is that K^+ is actively reabsorbed in the rectum, bringing the CO_3^{2-} along with it. Recycling of K^+ is thought to keep the blood from becoming highly acidic; moreover, the *slightly* acid hemolymph pH allows CO_2 to be regenerated there, to re-enter the cells and to be excreted by the spiracles. Such acid–base shuttling is reminiscent of similar shuttling in the mammalian gastrointestinal tract. When HCl is secreted to the stomach the hepatic portal blood becomes alkaline; conversely, when $KHCO_3$ is secreted in the pancreatic duct the hepatic portal blood returns to normality – the alkaline blood from the stomach never reaches the general circulation.

A V-ATPase in parallel with a strong-cation/proton antiport and a weak-anion channel can render the output side alkaline

In a membrane in which the antiporter activity is small compared to the V-ATPase activity and the anion conductance is large, the pH can range from 7 to near zero depending upon the strength of the anion. However, if the antiporter activity is nearly as large as the V-ATPase activity then the pH can range from below 7 to near 14 depending upon the nature of the neutralizing cation or anion.

Whether the output compartment will be acidic, neutral or alkaline is conveniently deduced from the strong ion difference, SID, defined as the sum of the strong cation concentrations minus the sum of the strong anion concentrations (Stewart, 1981). If the SID is very positive, e.g. $[K^+] >> [Cl^-]$, then the output solution is alkaline; if the SID is zero $[K^+]=[Cl^-]$ then the solution is neutral; finally, if the SID is very negative, e.g. $[K^+] << [Cl^-]$, then the solution is acidic (Table 3).

Salt and fluid transport through V-ATPase-energized membranes

Case 6. V-ATPase, C^+/nH^+ antiporter and anion conductance – salt/fluid flow

In Malpighian tubules and salivary glands of insects, massive fluxes of fluids (Maddrell and O'Donnell, 1992) are apparently energized by V-ATPases (Klein, 1992). This case is

Table 3. *Strong ion difference and pH of 0.1 mol l^{-1} solutions at 25 °C*

Solute	pH	C^+	A^-	SID	Explanation	
HCl	1.0	H^+	Cl^-	Very negative	H^+ very weak	Cl^- very strong
H_2CO_3	4.5	H^+	CO_3^{2-}	Less negative	H^+ very weak	CO_3^{2-} weak
*HOH	7.0	H^+	OH^-	Zero	H^+ very weak	OH^- very weak
KCL	7.0	K^+	Cl^-	Zero	K^+ very strong	Cl^- very strong
$KHCO_3$	8.6	K^+	HCO_3^-	Less positive	K^+ very strong	HCO_3^- moderately strong
K_2CO_3	11.6	K^+	CO_3^{2-}	Positive	K^+ very strong	CO_3^{2-} weak
KOH	13.0	K^+	OH^-	Very positive	K^+ very strong	OH^- very weak

* 55.5 mol l^{-1}.
SID, strong ion difference.

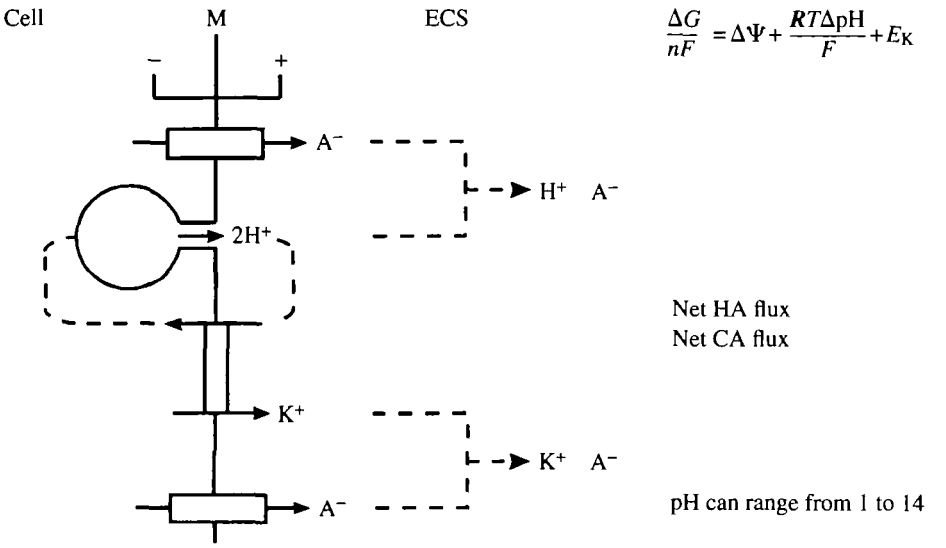

Fig. 6. V-ATPase in membrane with C^+/nH^+ antiporter and anion channel (salt fluid-flow model, insect Malpighian tubule and salivary gland). ECS, extracellular solution.

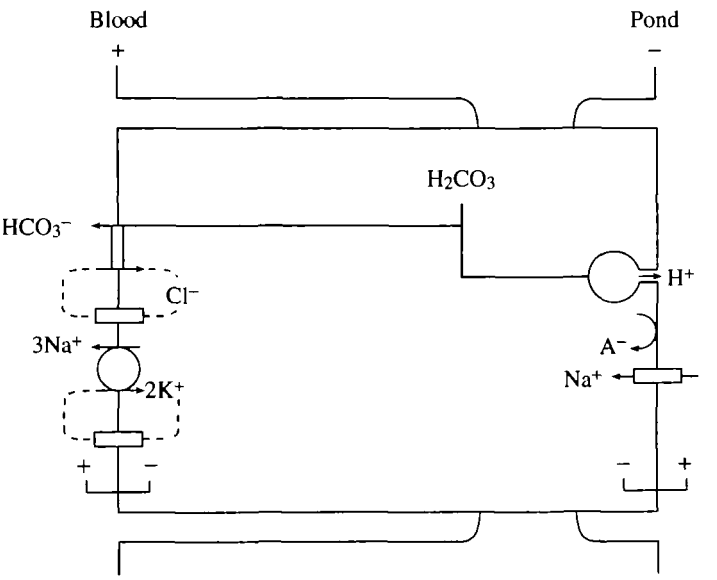

(1) Net Na^+ absorption (as $NaHCO_3$, pond to blood)
(2) $TEPD = Na^+/K^+_{pump}PD + K^+_{diff}PD + H^+_{pump}PD + Na^+_{diff}PD$
(3) Blood becomes alkaline, pond becomes acidic, H^+/Na^+ interchange

Fig. 7. V-ATPase in epithelial apical membrane with Na^+ channel; Na^+/K^+-ATPase in basolateral membrane with K^+ channel and bicarbonate/chloride antiporter (mitochondria-rich cell in frog skin).

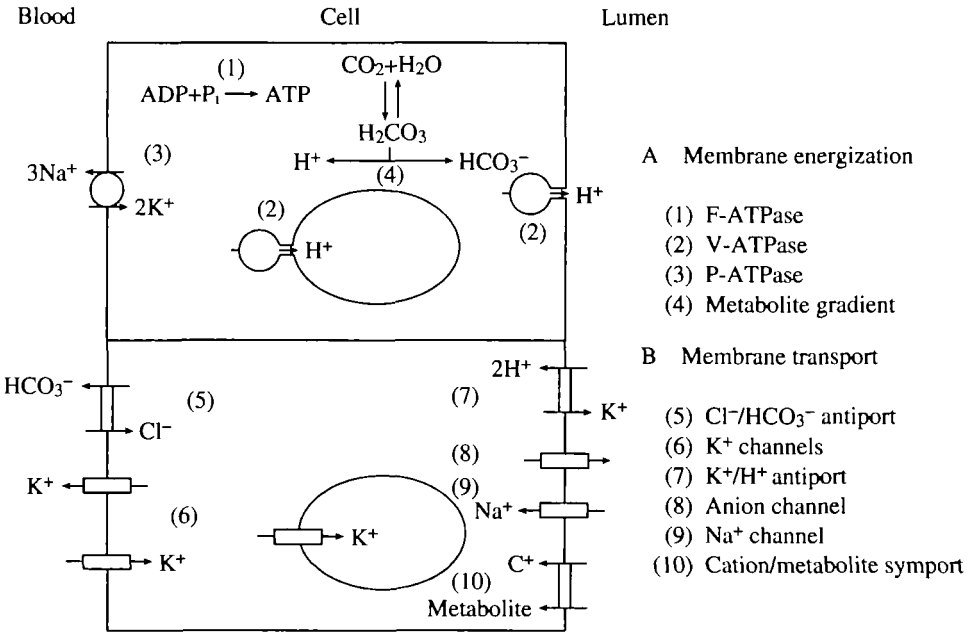

Fig. 8. Generalized model for V-ATPase physiology: (A) membrane energization involving F-ATPase, V-ATPase, P-ATPase and bicarbonate gradient; (B) membrane transport work mediated by antiporters, symporters and channels.

complex – an anion conductance must be present in the same membrane as a C^+/nH^+ antiporter to obtain the net salt movement required for osmotic water flow. The $\Delta\Psi$ must be less than the V-ATPase pmf because part of the $\Delta\Psi$ is shunted by the A^- flux.

V-ATPase energization of Malpighian tubule fluid transport can be explained by case 6. A net KCl flux to the tubular lumen would set up a local osmotic gradient, enabling water to flow while shunting most of the $\Delta\Psi$. Since K^+ is a strong cation and Cl^- is a strong anion, the pH would remain near 7.

Case 7. V-ATPase, Na^+/K^+-ATPase, Na^+ channel, Cl^-/HCO_3^- antiporter (frog skin model, MR cell; kidney tubule, CA cell)

Although the frog skin was the original model for Na^+-transporting epithelia (Koefoed-Johnsen and Ussing, 1958), the mechanism by which Na^+ could be taken up from dilute pond water remained unknown. It now appears that a V-ATPase is present in parallel with a Na^+ channel in the apical (pond side) membrane (Harvey, 1992). Na^+ is driven into the cells from the pond by the positive $\Delta\Psi$ established by the V-ATPase; it is driven from the cells to the blood by the P-ATPase (Na^+/K^+-ATPase) in the basolateral membrane (Fig. 7). The transepithelial $\Delta\Psi$, TE$\Delta\Psi$, is the sum of the apically located V-ATPase $\Delta\Psi$ and Na^+ diffusion potential added to the basolaterally located P-ATPase $\Delta\Psi$ and K^+ diffusion potential (Fig. 7; modified from Harvey, 1992).

A similar mechanism accounts for the acidification of kidney tubular lumen and

bicarbonate secretion to the blood (Gluck, 1992; Gluck and Nelson, 1992). Two cell types are involved. The V-ATPase is in the apical membrane of an A-type of intercalated cell whereas the Na^+ channel is in the apical membrane of nearby cells. Weak protons are pumped to the lumen while the $\Delta\Psi$ drives strong sodium ions from lumen to cell, accounting for the acidification of the lumen. The Na^+ is pumped to the blood and HCO_3^- is exchanged for Cl^- across the basolateral membrane, accounting for $NaHCO_3$ absorption.

Case 8. Generalized model – three pumps, metabolic gradient, channels and porters

Many cases of secretion and absorption of ions and water by epithelial cells appear to be variations of a simple model – membrane energization (Fig. 8A) followed by ion transport (Fig. 8B). Membrane energization appears to be achieved by four mechanisms: (1) ATP synthesis using F-ATPases; ATP hydrolysis using (2) V-ATPases or (3) P-ATPases; and (4) assymetrically discharging metabolic gradients, e.g. CO_2. Ion transport can utilize (5) Cl^-/HCO_3^- antiport, (6) K^+ channels, (7) K^+/H^+ antiport, (8) anion channels, (9) Na^+ channels and (10) cation/metabolite symport as well as numerous other transport proteins (Sze, 1992). Martin (1992) has quantified these complex relationships, using electrical circuit analysis. In conclusion, the electrogenicity of ion pumps under steady-state conditions – and particularly that of V-ATPases – is forcing us to rewrite membrane transport biophysics and physiology in terms of the *interactions* among pumps, channels and coupling transporters.

This review was supported in part by NIH research grant AI-22444. I am deeply indebted to Professor Dr Helmut Wieczorek, Dr Ulla Klein and Mr Ralph Graf for our ongoing collaboration regarding insect V-ATPases. I thank Dr Julian A. T. Dow, Dr Frank Martin, Dr Frans J. S. Novak, Dr Ranganath Parthasarathy, Dr Clifford L. Slayman and Dr Michael G. Wolfersberger for many stimulating discussions. Finally, I thank Mr Daniel J. Harvey and Ms Beth Gordesky-Gold for assistance with the artwork.

References

ANDERSON, E. AND HARVEY, W. R. (1966). Active transport by the cecropia midgut. II. Fine structure of the midgut epithelium. *J. Cell Biol.* **31**, 107–134.

BERTL, A. AND SLAYMAN, C. L. (1992). Complex modulation of cation channels in the tonoplast and plasma membrane of *Saccharomyces cerevisiae*: single-channel studies. *J. exp. Biol.* **172**, 271–287.

BOWMAN, B. J., DSCHIDA, W. J. AND BOWMAN, E. J. (1992). Vacuolar ATPase of *Neurospora crassa*: electron microscopy, gene characterization and gene inactivation/mutation. *J. exp. Biol.* **172**, 57–66.

BOWMAN, B. J., DSCHIDA, W. J., HARRIS, T. AND BOWMAN, E. J. (1989). The vacuolar ATPase of *Neurospora crassa* contains an F_1-like structure. *J. biol. Chem.* **264**, 15606–15612.

BROWN, D., GLUCK, S. AND HARTWIG, J. (1987). Structure of a novel membrane-coating material in proton-secreting epithelial cells and identification as an H^+-ATPase. *J. Cell Biol.* **105**, 1637–1648.

BROWN, D., SABOLIC, I. AND GLUCK, S. (1992). Polarized targeting of V-ATPase in kidney epithelial cells. *J. exp. Biol.* **172**, 231–243.

CHAO, A. C., KOCH, A. AND MOFFETT, D. F. (1989). Active chloride transport in isolated posterior midgut of tobacco hornworm (*Manduca sexta*). *Am. J. Physiol.* **257**, R752–R761.

CHAO, A. C., MOFFETT, D. F. AND KOCH, A. (1991). Cytoplasmic pH and goblet cell cavity pH in the posterior midgut of the tobacco hornworm (*Manduca sexta*). *J.exp. Biol.* **155**, 403–414.

CHATTERJEE, D., CHAKRABORTY, M., LEIT, M., NEFF, L., JAMSA-KELLOKUMPU, S., FUCHS, R. AND BARON,

R. (1992). The osteoclast proton pump differs in its pharmacology and catalytic subunits from other vacuolar H^+-ATPases. *J. exp. Biol.* **172**, 193–204.

CIOFFI, M. (1979). The morphology and fine structure of a moth *Manduca sexta* in relation to active ion transport. *Tissue & Cell* **11**, 467–479.

DOW, J. A. T. (1984). Extremely high pH in biological systems: a model for carbonate transport. *Am. J. Physiol.* **246**, R633–R635.

DOW, J. A. T. (1986). Insect midgut function. *Adv. Insect. Physiol.* **19**, 187–328.

DOW, J. A. T. (1992). pH gradients in lepidopteran midgut. *J. exp. Biol.* **172**, 355–375.

DOW, J. A. T., GUPTA, B. L., HALL, T. A. AND HARVEY, W. R. (1984). X-ray microanalysis of elements in frozen-hydrated sections of an electrogenic K^+ transport system: the posterior midgut of tobacco hornworm (*Manduca sexta*) *in vivo* and *in vitro*. *J. Membrane Biol.* **77**, 223–241.

DOW, J. A. T. AND PEACOCK, J. M. (1989). Microelectrode evidence for the electrical isolation of goblet cell cavities in *Manduca sexta* middle midgut. *J.exp. Biol.* **143**, 101–114.

FORGAC, M. (1989). Structure and function of vacuolar class of ATP-driven proton pumps. *Physiol. Rev.* **69**, 165–196.

FORGAC, M. (1992). Structure, function and regulation of the coated vesicle (H^+)-ATPase. *J. exp. Biol.* **172**, 155–169.

GIORDANA, B., SACCHI, V. F., PARENTI, P. AND HANOZET, G. M. (1989). Amino acid transport systems in intestinal brush-border membranes of lepidopteran larvae. *Am. J. Physiol.* **257**, R494–R500.

GLUCK, S. L. (1992). V-ATPases of the plasma membrane. *J. exp. Biol.* **172**, 29–37.

GLUCK, S. L. AND NELSON, R. D. (1992). The role of the V-ATPase in renal epithelial H^+ transport. *J. exp. Biol.* **172**, 205–218.

GLUCK, S. L., NELSON, R. D., LEE, B. S., WANG, Z.-Q., GUO, X., FU, J.-Y. AND ZHANG, K. (1992). Biochemistry of renal V-ATPases. *J. exp. Biol.* **172**, 219–229.

GRINSTEIN, S., NANDA, A., LUKACS, G. AND ROTSTEIN, O. (1992). V-ATPases in phagocytic cells. *J. exp. Biol.* **172**, 179–192.

GUPTA, B. L. AND BERRIDGE, M. J. (1966). A coat of repeating subunits on the cytoplasmic surface of the plasma membrane in the rectal papillae of the blowfly, *Calliphora erythrocephala* (Meig.), studied *in situ* by electron microscopy. *J. Cell Biol.* **29**, 376–382.

HARVEY, B. J. (1992). Energization of sodium absorption by the H^+-ATPase in mitochondria-rich cells of frog skin. *J. exp. Biol.* **172**, 289–309.

HARVEY, W. R. (1980). Water and ions in the gut. In *Insect Biology in the Future 'VBW 80'*, (ed. M. Locke and D. S. Smith), pp. 105–125. New York: Academic Press.

HARVEY, W. R., CIOFFI, M. AND WOLFERSBERGER, M. G. (1981). Portasomes as coupling factors in active ion transport and oxidative phosphorylation. *Am. Zool.* **21**, 775–791.

HARVEY, W. R., HASKELL, J. A. AND ZERAHN, K. (1967). Active transport of potassium and oxygen consumption in the isolated midgut of *Hyalophora cecropia*. *J. exp. Biol.* **46**, 235–248.

IHARA, K., ABE, T., SUGIMURA, K. AND MUKOHATA, Y. (1992). Halobacterial A-ATP synthase in relation to V-ATPase. *J. exp. Biol.* **172**, 475–485.

KLEIN, U. (1992). The insect V-ATPase, a plasma membrane proton pump energizing secondary active transport: immunological evidence for the occurrence of a V-ATPase in insect ion transporting epithelia. *J. exp. Biol.* **172**, 345–354.

KLINK, R. AND LÜTTGE, U. (1991). Electron-microscopic demonstration of a 'head and stalk' structure of the leaf vacuolar ATPase in *Mesembryanthemum crystallinum* L. leaves. *Bot. Acta* **104**, 122–131.

KLIONSKY, D. J., NELSON, H., NELSON, N. AND YAVER, D. S. (1992). Mutations in the yeast vacuolar ATPase result in the missorting of vacular proteins. *J. exp. Biol.* **172**, 83–92.

KOEFOED-JOHNSEN, V. AND USSING, H. H. (1958). The nature of the frog skin potential. *Acta physiol. scand.* **42**, 298–308.

MADDRELL, S. H. P. AND O'DONNELL, M. J. (1992). Insect Malpighian tubules: V-ATPase action in ion and fluid transport. *J. exp. Biol.* **172**, 417–429.

MANDEL, L. J., MOFFETT, D. F., RIDDLE, T. G. AND GRAFTON, M. M. (1980). Coupling between oxidative metabolism and active transport in the midgut of tobacco hornworm. *Am. J. Physiol.* **238**, C1–C9.

MARTIN, F. G. (1992). Circuit analysis of transmembrane voltage relationships in V-ATPase-coupled ion movements. *J. exp. Biol.* **172**, 387–402.

MELLMAN, I. (1992). The importance of being acid: the acidification of intracellular membrane traffic. *J. exp. Biol.* **172**, 39–45.

MELLMAN, I., FUCHS, R. AND HELENIUS, A. (1986). Acidification of the endocytic and exocytic pathways. *A. Rev. Biochem.* **55**, 663–700.

MITCHELL, P. (1961). Coupling of phosphorylation of electron and hydrogen transfer by a chemiosmotic type of mechanism. *Nature* **191**, 144–148.

MOFFETT, D. F. AND KOCH, A. (1988). Electrophysiology of K^+ transport by midgut epithelium of lepidopteran insect larvae. II. The transapical electrochemical gradients. *J. exp. Biol.* **135**, 38–49.

MOFFETT, D. F. AND KOCH, A. (1992). Driving forces and pathways for H^+ and K^+ transport in insect midgut goblet cells. *J. exp. Biol.* **172**, 403–415.

MORIYAMA, Y., MAEDA, M. AND FUTAI, M. (1992). The role of V-ATPase in neuronal and endocrine systems. *J. exp. Biol.* **172**, 171–178.

MORRE, J. D., LIEDTKE, C., BRIGHTHAM, A. O. AND SCHERER, G. F. E. (1991). Head and stalk structures of soybean vacuolar membranes. *Planta* **184**, 343–349.

NELSON, N. (1988). Structure, function and evolution of proton-ATPases. *Plant Physiol.* **86**, 1–3.

NELSON, N. (1989). Structure, molecular genetics and evolution of vacuolar H^+-ATPases. *J. Bioenerg. Biomembr.* **21**, 553–570.

NELSON, N. (1992*a*). The vacuolar H^+-ATPase – one of the most fundamental ion pumps in nature. *J. exp. Biol.* **172**, 19–27.

NELSON, N. (1992*b*). Structure and function of V-ATPases in endocytic and secretory organelles. *J. exp. Biol.* **172**, 149–153.

PEDERSON, P. L. AND CARAFOLI, E. (1987). Ion motive ATPases. I. Ubiquity, properties and significance to cell function. *Trends biochem. Sci.* **12** 146–150.

RIDGWAY, R. L. AND MOFFETT, D. F. (1986). Regional differences in the histochemical localization of carbonic anhydrase in the midgut of tobacco hornworm (*Manduca sexta*). *J. exp. Zool.* **237**, 407–412.

SCHMIDT, W., WINKLER, H. AND PLATTNER, H. (1982). Adrenal chromaffin granules: evidence for an ultrastructural equivalent of the proton pumping ATPase. *Eur. J. Cell Biol.* **27**, 96–104.

STADLER, H. AND TSUKITA, S. (1984). Synaptic vesicles contain an ATP-dependent proton pump and show 'knob-like' protrusions on their surface. *EMBO J.* **3**, 3333–3337.

STEVENS, T. H. (1992). The structure and function of the fungal V-ATPase. *J. exp. Biol.* **172**, 47–55.

STEWART, P. A. (1981). *How to Understand Acid–Base: A Quantitative Acid–Base Primer for Biology and Medicine*, 186pp, New York: Elsevier North Holland Inc.

STONE, D. K., CRIDER, B. P., SÜDHOF, T. C. AND XIE, X. (1989). Vacuolar proton pumps. *J. Bioenerg. Biomembr.* **21**, 605–620.

SZE, H. (1985). H^+-translocating ATPases: advances using membrane vesicles. *A. Rev. Plant Physiol.* **36**, 175–208.

SZE, H., WARD, J. M., LAI, S. AND PERERA, I. (1992). Vacuolar-type H^+-translocating ATPase in plant endomembranes: subunit organization and multigene family. *J. exp. Biol.* **172**, 123–135.

TAIZ, S. L. AND TAIZ, L. (1991). Ultrastructural comparison of the vacuolar and mitochondrial H^+ATPase of *Daucus carota*. *Bot. Acta* **104**, 117–121.

THURM, U. AND KÜPPERS, J. (1980). Epithelial physiology of insect sensilla. In *Insect Biology in the Future 'VBW 80'* (ed. M. Locke and D. S. Smith), pp. 735–764. New York: Academic Press.

WIECZOREK, H. (1992). The insect V-ATPase, a plasma membrane proton pump energizing secondary active transport: molecular analysis of electrogenic potassium transport in the tobacco hornworm midgut. *J. exp. Biol.* **172**, 335–343.

WIECZOREK, H., PUTZENIECHNER, M., ZEISKE, W. AND KLEIN, U. (1991). A vacuolar-type proton pump energizes K^+/H^+-antiport in an animal plasma membrane. *J. biol. Chem.* **266**, 15340–15342.

WIECZOREK, H., WEERTH, S., SCHINDLBECK, M. AND KLEIN, U. (1989). A vacuolar-type proton pump in a vesicle fraction enriched with potassium transporting plasma membranes from tobacco hornworm midgut. *J. biol. Chem.* **264**, 11143–11148.

WOLFERSBERGER, M. G. (1992). V-ATPase-energized epithelia and biological insect control. *J. exp. Biol.* **172**, 377–386.

ZEISKE, W. (1992). Insect ion homeostasis. *J. exp. Biol.* **172**, 323–334.